Kenwood TKR-820 Repeater

Modification to Allow Digital PL Encoding Control to Facilitate Linking

By: WD7F
http://www.wd7f.com/

Here is a method of controlling Digital Private Line (DPL) or Signal encoding as described by Kenwood. With the increasing popularity of Voice over Internet Protocol (VoIP) systems such as EchoLink and IRLP, it is almost a requirement to strip the ID, hang times and reset beeps from the audio that traverses the Internet to the connected node. One method involves switching off the repeater transmitter encoding as a function of COS so that the receiving link radio only passes audio when the DPL is present.

If the Signaling Unit is programmed for PL encoding, this method should control the MOD output on CN2-2 if configured similarly, however it has not been tested.

When using this method of tone control, the short low frequency tone burst at the end of the repeater transmission, after the DPL drop that aids Motorola and other radios to squelch audio quickly, will not be transmitted. However, the DPL squelch in the Motorola and Kenwood radios that have this capability operated very satisfactorily without it.

This method uses an Omron G3VM-352C MOSFET analog switch to allow the Tone output of the Signaling Unit (CN1-1) to pass to the TKR-820 transmitter only when the COR is present. (See Figure 1) The analog switch is available from http://www.mouser.com/omron.

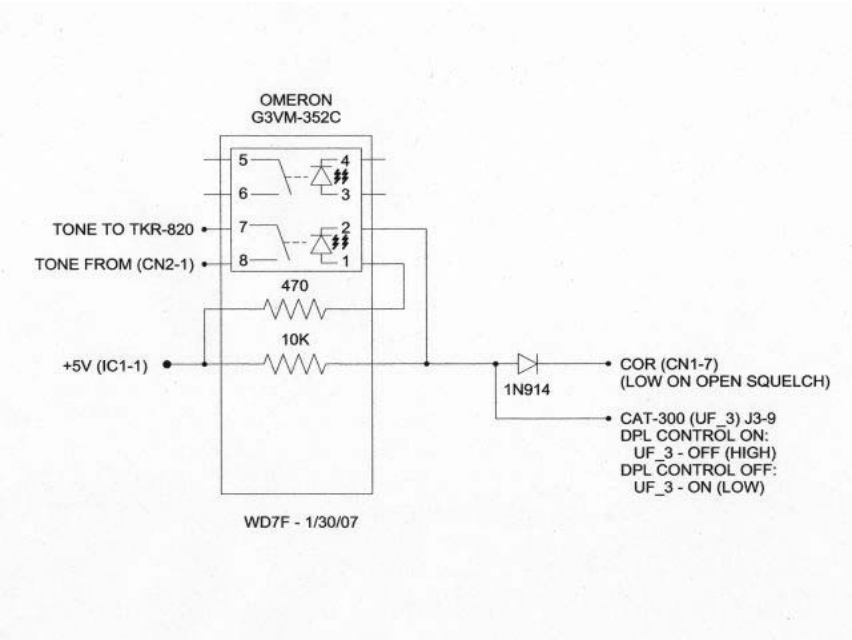

Figure 1

The MOSFET Analog Switch is mounted on a small Radio Shack project board along with a 470 ohm resistor to provide turn-on source and a 10 kohm resistor to provide pull-up for the COR

signal. The DPL encoding is allowed to operate normally, if desired, by DTMF control from the CAT-300 and can turn on the switch continuously so the COR will have no effect.

Note that the Omron G3VM-352C is a dual switch and the other analog switch was used to interrupt the KEY to allow shut down of the repeater by DTMF input to our CAT-300 Controller. (See TKR-820 Modification to Allow DTMF Controlled Repeater Turn-On and Turn-Off). Figure 2 shows the position of the DPL/KEY control circuit in the vicinity of the Signaling Unit.

A neat thing about this MOSFET unit is that it needs no separate voltage supply. It has a low current drain and the 0.3 msec turn-on and 0.1 msec turn-off is more than adequate.

The +5 VDC is picked up from the Signaling Unit. The COR are picked up on the underside of the printed circuit board. Note the two connector wires that have been cut and heat shrink applied to facilitate returning the Signaling Unit wiring to its original state if required. (Figure 2)

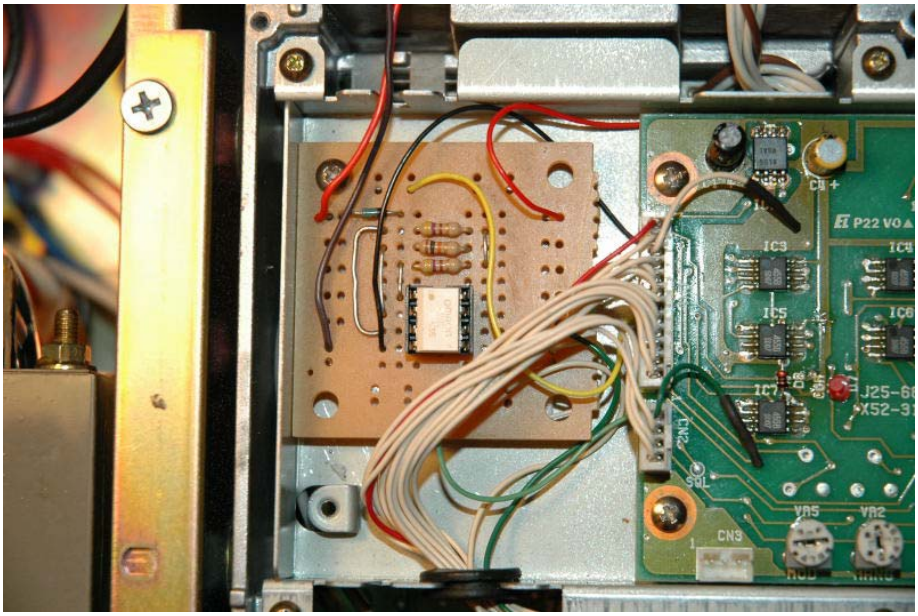

Figure 2